MULTIBAND ROOFTOP 2 PORTS MIMO ANTENNA

T01811828

TRANSPORT

POLOMARCONI.IT

POLOMARCONI offers a very wide range of wireless products.
Our products can be tailored according to the customer's need.

Electrical Specifications

Frequency bands	
700MHz, band	694 ÷ 790 MHz
800MHz, band	790 ÷ 870 MHz
900MHz, band	870 ÷ 960 MHz
1800/2100MHz, band	1710 ÷ 2170 MHz
Wi-Fi band	2400 ÷ 2500 MHz 2500 ÷ 2700 MHz 3300 ÷ 4900 MHz 4900 ÷ 5935 MHz

GENERAL DATA	
Impedance (Ω)	50
VSWR	< 1.7:1
Continuous Max. Composite Power (W)	10
Polarization	linear vertical
Gain (dBi)	5 for 700/800/900 MHz 7 for 1800/2100 MHz 7 for 2400 ÷ 2500 MHz 7 for 2500 ÷ 2700 MHz 7.5 for 3300 ÷ 4900 MHz 8.5 for 4900 ÷ 5935 MHz
Isolation between ports (dB)	> 15 for frequency < 1000 MHz > 25 for frequency > 1700 MHz
Operating Temp. Range (°C)	-40 ÷ +85

NAVIGATION AND GEOLOCALIZATION BANDS	
Frequency band (MHz)	1574 ÷ 1610
Impedance (Ω)	50
VSWR	≤ 2.0:1
Polarization	RHCP
Total gain (dBic) @ 90° of elevation	30, @T_0=25°C, V_{DC}=5V
LNA noise figure (dB)	≤ 2.5, @T_0=25°C, V_{DC}=5V
LNA current consumption (mA)	< 50, @T_0=25°C, V_{DC}=5V
LNA input voltage (V)	3 ÷ 5
Satellite navigation and geolocalization supported systems	GPS, GALILEO and GLONASS
Operating Temp. Range (°C)	-40 ÷ +85

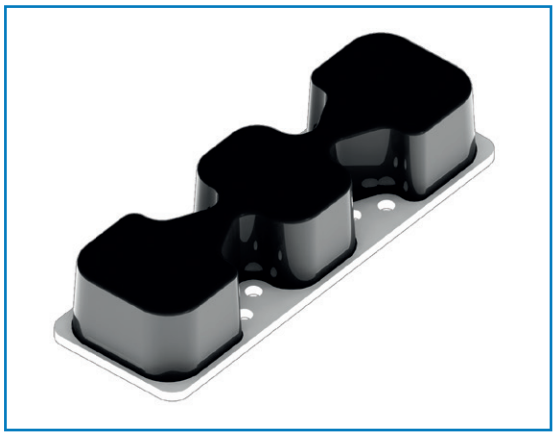

DESCRIPTION

Railway multiband rooftop 2 ports MIMO antenna for 2G/3G/4G cellular, Wi-Fi 2.4 GHz and 5 GHz bands, with embedded GPS, Galileo and Glonass antenna with integrated LNA.
Supports 2x2 cellular and Wi-Fi MIMO.
Works also on non-metallic surfaces.
Antenna is designed to conduct short-circuit currents according to EN 50124

Mechanical Specifications

Connectors	
2G/3G/4G and Wi-Fi bands	2 x N f
NAVIGATION AND GEOLOCALIZATION bands	1 x 200mm of low loss RF coaxial cable pigtail with N f connector (cable length and connectors could be tailored on customer needs)
Dimensions (Height from installation surface x Width x Depth, mm)	80 x 125 x 380
Weight (kg)	abt. 3.3
Materials	
Base	Aluminum with SURTEC 650 galvanic treatment
Radome	High impact polycarbonate
Mounting	the antenna needs to be installed in longitudinal position with respect to the wind/driving direction
Ground plane requirement	the above indicated VSWR values are also valid for installations on non-metallic surfaces, but in order to obtain the above indicated gain values it is necessary to install the antenna at the center of a metallic conductive groundplane of minimum dimensions 1000x1000mm; it's advisable to keep the mounting metallic conductive surface clean and free from paint for an optimal electrical contact.

Environmental Specifications
ATMOSPHERIC and CLIMATIC CONDITIONS according to EN50155:2017-10 and EN60068
MECHANICAL CONDITIONS according to EN50155:2017-10 and EN61373
EMC according to EN50121-3-2:2016
DC GROUNDING, HIGH VOLTAGE, HIGH CURRENT PROTECTION according to EN50124-1 and UIC533
RoHS and REACH compliant
FLAMMABILITY RATING according to EN45545-2:2013/A1:2015
IP rating: IP69

MOUNTING FLANGE

Mounting flange holes are indicated in the relevant mounting instruction document.

MOUNTING FLANGE

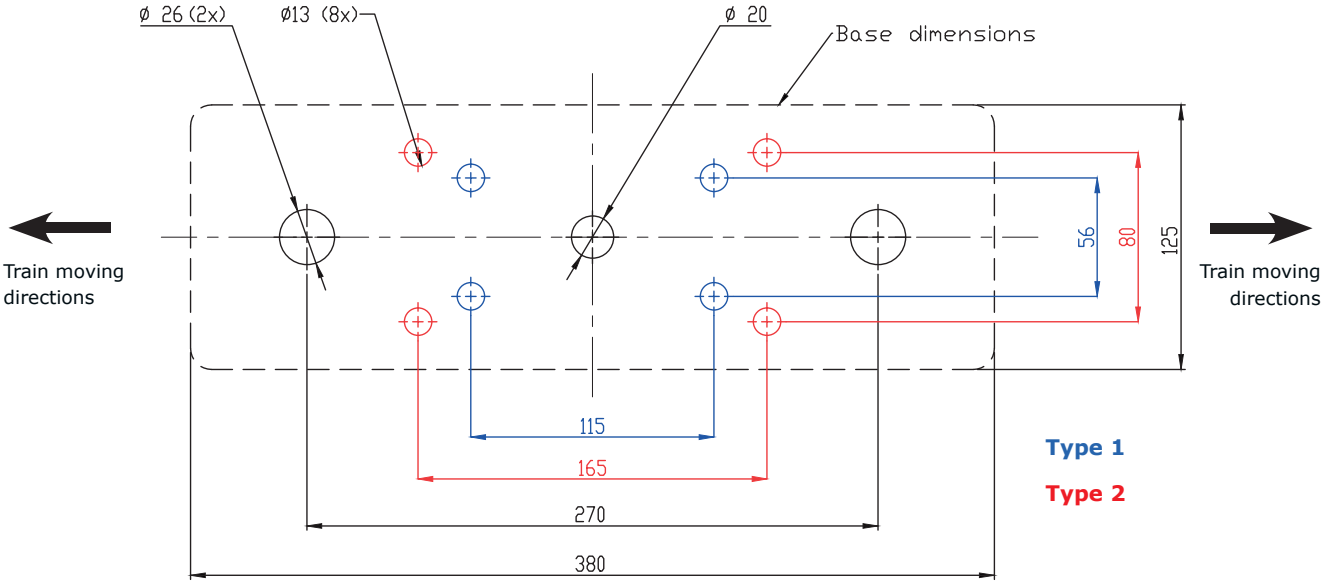

All dimensions are in mm
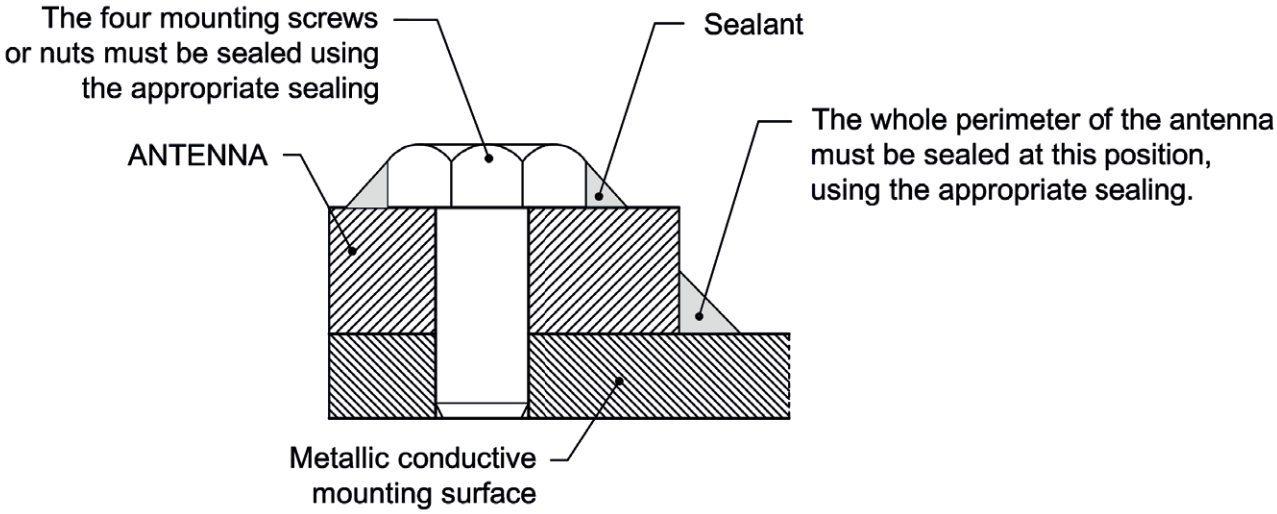
MOUNTING RECOMMENDATIONS